REVISIONS					
ZONE	LTR	BY	DESCRIPTION	DATE	APPROVED

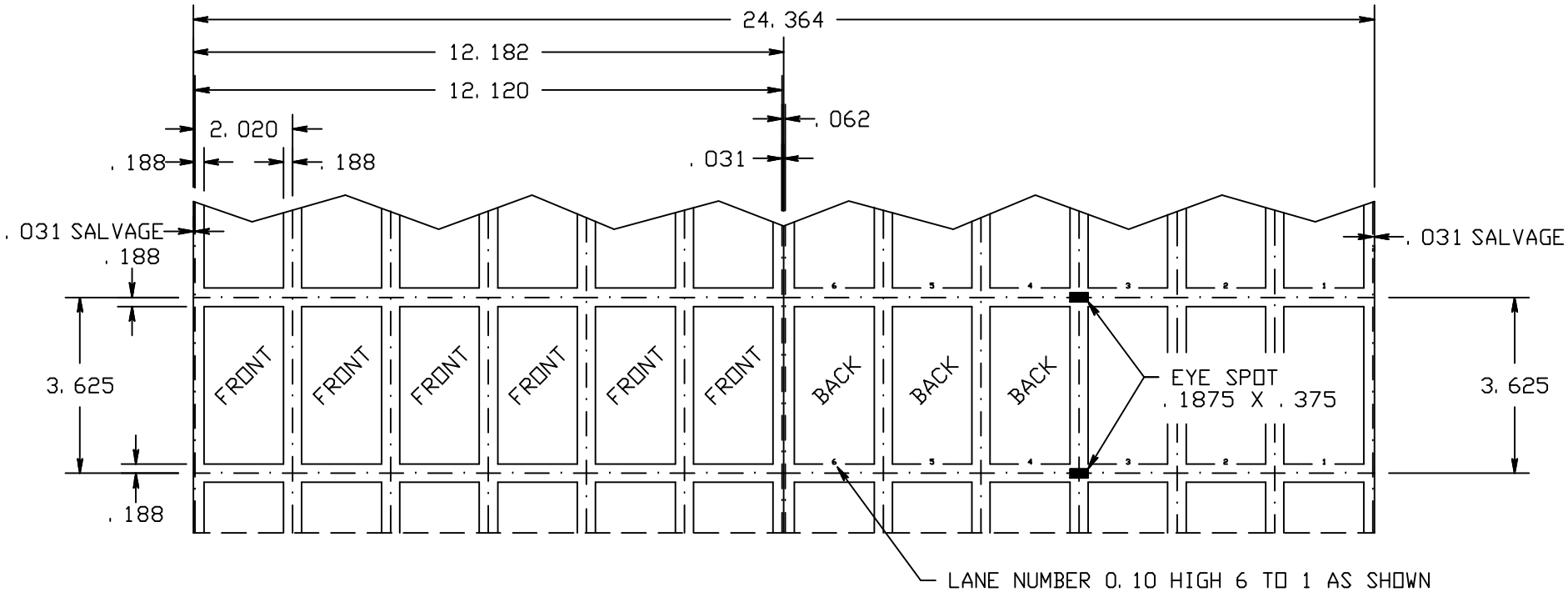

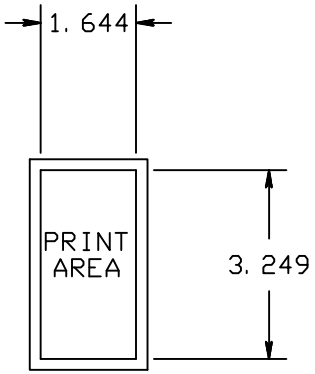

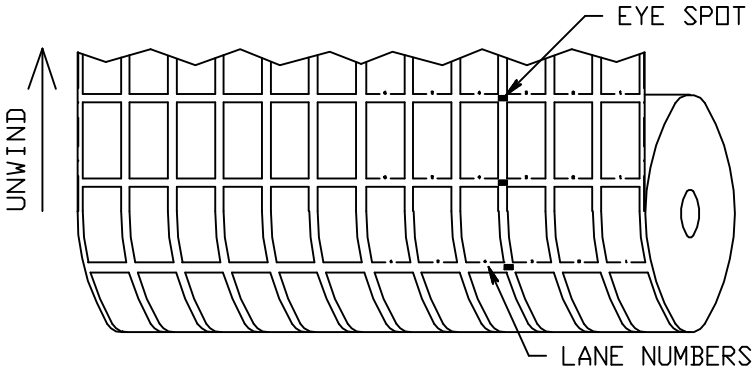

WINDING DIAGRAM

NOTES:
1. EYE SPOT MUST BE HIGH TEMTERATUERE INK IF SURFACE PRINTED.
2. REPEAT TOLERANCE ON EYE SPOT TO BE +/- .015 PER REPEAT, TOTAL TOLERANCE ON 10 REPEATS NOT TO EXCEED +/- .062
3. EYE SPOTS MUST BE A CONTRASTING OPAQUE COLOR.
4. MAX. ROLL DIA. 16.00", CORE DIA. NOMINAL 3".
5. INCLUDE LANE NUMBER ON BACK OF EACH PACKET AS SHOWN.

NOTICE:
THIS DOCUMENT CONTAINS INFORMATION PROPRIETARY TO NATIONAL TOWELETTE COMPANY. REPRODUCTION OR DISSEMINATION OF INFORMATION PROVIDED HEREIN, OR OTHER USE NOT AUTHORIZED IN WRITING BY NATIONAL TOWELETTE COMPANY IS STRICTLY PROHIBITED.

MATERIAL	HEAT TREATMENT	FINISH

ALL TOLERANCES UNLESS OTHERWISE SPECIFIED

		DATE
DRAWN	BLH	9/22/98
CHECKED	TDB	9/22/98
DESIGNER		
ENGINEER		

NATIONAL TOWELETTE COMPANY
1400 TAYLORS LANE CINNAMINSON NJ 08077

TITLE: WEB LAYOUT FOR 6 LANE 8" TOWELETTE

SIZE	DWG. NO.	REV
C	CCLWEB68	

SCALE N.T.S. NEXT ASSY: SHT of